NVIDIA

GeForce2 GTS

3D GRAPHIC ACCELERATOR

MANUAL

NVIDIA GeForce2 GTS User's Manual

TABLE OF CONTENTS

1. NVIDIA GeForce2 GTS....2
2. GeForce2 GTS Board Outline....4
    2.1 GeForce2 GTS using DDR SGRAM (SP6600)....4
    2.2 GeForce2 GTS using DDR SDRAM (SP6700)....5
3.Hardware installation....6
    3.1 Package Contents....6
    3.2 Installing the card....6
    3.3 Micro Cross DVI Connector System....7
    3.4 Resolutions and colors supported:....8
4. Smart Installation....9
5. Manually install Windows 95 & Windows 98 drivers....11
    5.1 Installation and Setup....11
        5.1.1 Windows95....11
        5.1.2 Windows98....11
    5.2 How to Change Color Depth and Resolution....12
    5.3 How to Change Refresh Rate....12
6. Windows NT 4.0....14
7. Windows 2000....15
FCC Statement....16
    Warning:....16
Trademark Acknowledgments....16

1. NVIDIA GeForce2 GTS

Memory Size:

SP6600 GeFORCE2 GTS 32MB on Board with DDRSGRAM

SP6700 GeFORCE2 GTS 64MB on Board with DDRSDRAM

1.1 NVIDIA GeForce2 GTS DDR SGRAM & SDRAM Features

2ND-GENERATION GPU FEATURES

•Per-Pixel Shading
•High Definition Video Processor
•High Performance Hardware Anti-aliasing
•256-bit Graphics Architecture
•AGP 4X with Fast Writes
•32-bit color
•DirectX Texture Compression
•8 Texels Per Clock
•2nd-generation T&L Engines
•Integrated Single-link TMDS Transmitter
•Double Data Rate (DDR) Memory
•Cube Environment Mapping
•Industry's only true 32-bit Z/Stencil
•DXTC Support

PERFORMANCE

•1.6 GigaTexel Fill Rate
•5.3GB/sec Memory Bandwidth
•>25 Million Triangles/sec
•350 MHz RAMDAC
•Maximum 3D/2D resolution of 2048 x 1536 @ 75Hz
•Complete DirectX 7, DirectX 6 and DirectX 5 support
•Memory configurations, up to 128MB DDR SDRAM/SGRAM

VISUALLY STUNNING INTERACTIVE 3D

•Optimized DirectX and OpenGL acceleration
•8 texture-mapped, filtered, lit texels per clock cycle
•HW Anti-aliasing
•High Quality Texture Filtering, including Anisotropic
•Per-pixel dot product 3 bump mapping
•Projective textures
•Texture modulation
•Reflection maps
•DX6 texture compression
•Radial or linear
•256-bit graphics engine
•Single pass multi-texturing
•32-bit Colors, Z/stencil buffer
•Per-pixel lighting and shading
•Cub environment mapping
•Multi-texture and multi-pass
•Light maps
•Procedural textures
•Fog and Depth Cueing
•Per-vertex or per-pixel
•Advanced per-pixel, perspective-correct texturing and shading
•BRDF Support: Bi-Directional Reflectance Distrubtion Functions

HIGH-PERFORMANCE 256-BIT 2D ACCELERATION

•Optimized for multiple color depths including 32, 24, 16, 15, and 8-bits per pixel
•True-color hardware cursor
•Multi-buffering (double, triple, quad buffering) for smooth animation and video playback

HIGH-QUALITY HDTV/DVD PLAYBACK

•Independent hardware color controls for video overlay
•Hardware color space conversion (YUV 4:2:2 and 4:2:0)
•5-tap horizontal by 3-tap vertical filtering
•8:1 upscaling and downscaling
•Per-pixel color keying
•DVD sub-picture alpha blended compositing
•High Definition Video Processor (HDVP) for full-screen, full-frame video playback of all HDTV and DVD and resolutions
•Multiple video windows with hardware color space conversion and filtering
•Video acceleration for DirectShow, MPEG-1, MPEG-2, and Indeo

COMPREHENSIVE SYSTEM INTERFACE

•AGP 4X support, including Fast Writes and Execute Mode
•AGP 1X, 2X, and VAGP support
•NTSC or PAL TV output (optional)
•DVI digital output connector, support TMDS Panellink resolution up to SXGA/UXGA (optional)
•Windows 2000, Windows NT 4.0 display drivers
•Windows 98 and Windows 95 display drivers, DirectDraw, Direct3D, DirectVideo, ActiveX
•OpenGL ICD for Windows 95, Windows 98, Windows 2000, Windows NT, and Linux

2. GeForce2 GTS Board Outline

2.1 GeForce2 GTS using DDR SGRAM (SP6600)

32M on board

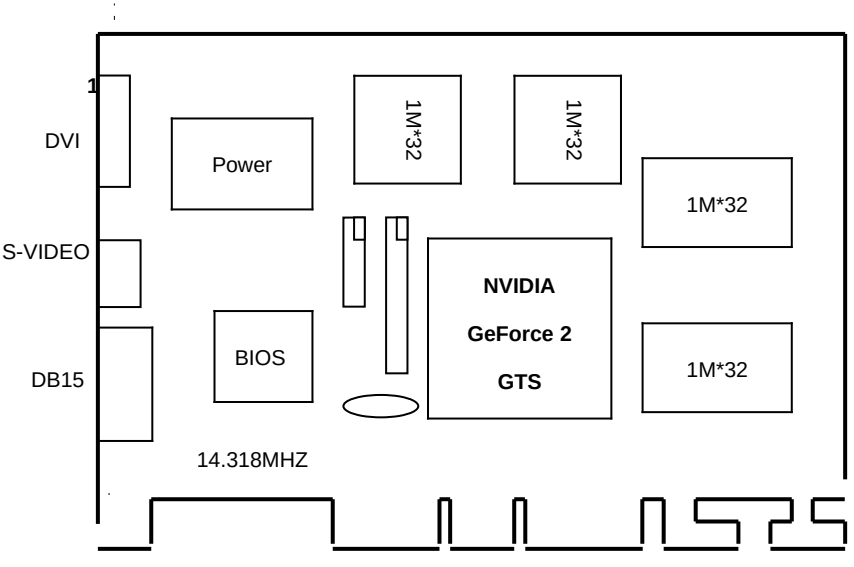

NOTE 1: TV output connector and encoder are reserved for optional

NOTE 2: DVI connector and LCD encoder are reserved for optional

2.2 GeForce2 GTS using DDR SDRAM (SP6700)
64M on board

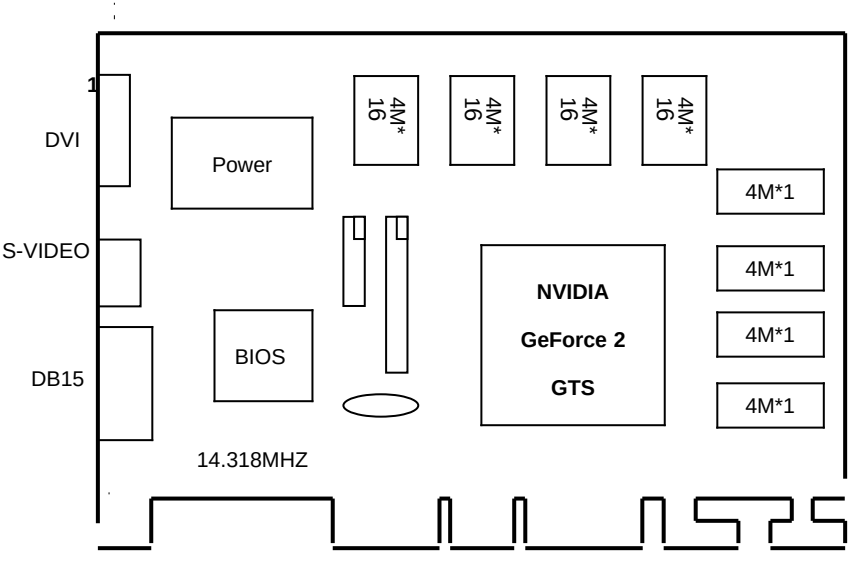

NOTE 1: TV output connector and encoder are reserved for optional
NOTE 2: DVI connector and LCD encoder are reserved for optional

3.Hardware installation

3.1 Package Contents

1. NVIDIA GeForce2 GTS 3D Accelerator card
2. CD title or Software diskettes
3. This manual

3.2 Installing the card

1. Turn off your computer
2. Remove the cover of the computer per the owner's manual
3. Install the card in the AGP bus slots
4. Replace the cover.

3.3 Micro Cross DVI Connector System

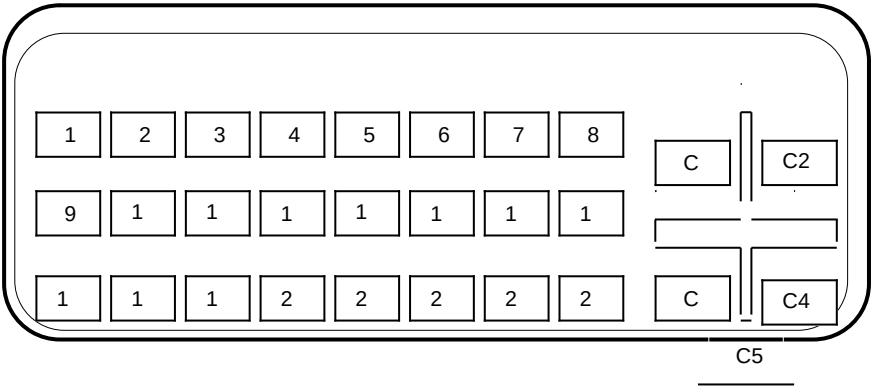

“Micro Cross:”/high speed pins;

C1 Analog Red Video Out
C2 Analog Green Video Out
C3 Analog Blue Video Out
C4 Analog Horizontal Sync
C5 Analog Common Ground Return (Red , Green , Blue Video Out)
Note: C1 – C5 Analog signal is not support, just for SPEC. reference

Main Pin Field:

1. TMDS Data 2-
2. TMDS Data 2+
3. TMDS Data 2/4 Shield
4. TMDS Data 4-
5. TMDS Data 4+
6. DDC Clock
7. DDC Data
8. Analog Vertical Sync
9. TMDS Data 1-
10. TMDS Data1+
11. TMDS Data1/3 Shield
12. TMDS Data 3-
13. TMDS Data 3+
14. +5V Power
15. Ground (+5, Analog H/V Sync)
16. Hot Plug Detect
17. TMDS Data 0-
18. TMDS Data 0+
19. TMDS Data 0/5 Shield
20. TMDS Data 5-
21. TMDS Data 5+
22. TMDS Clock Shield

23. TMDS Clock
24. TMDS Clock

3.4 Resolutions and colors supported:

NV15

	Bits Per pixel	Memory Req. (MB)	Refresh Rates (HZ)
640*480	8	1MB	60/70/72/75/85/100/120/140/144/150/170/200/240
	16	1MB	60/70/72/75/85/100/120/140/144/150/170/200/240
	32	2MB	60/70/72/75/85/100/120/140/144/150/170/200/240
800*600	8	1MB	60/70/72/75/85/100/120/140/144/170/200/240
	16	1MB	60/70/72/75/85/100/120/140/144/170/200/240
	32	2MB	60/70/72/75/85/100/120/140/144/170/200/240
1024*768	8	1MB	60/70/72/75/85/100/120/140/144/150/170/200/240
	16	2MB	60/70/72/75/85/100/120/140/144/150/170/200/240
	32	4MB	60/70/72/75/85/100/120/140/144/150/170/200
1152*864	8	1MB	60/70/72/75/85/100/120/140/144/150/170/200
	16	2MB	60/70/72/75/85/100/120/140/144/150/170/200
	32	4MB	60/70/72/75/85/100/120/140/144/150
1280*960	8	2MB	60/70/72/75/85/100/120/140/144/150/170
	16	4MB	60/70/72/75/85/100/120/140/144/150/170
	32	8MB	60/70/72/75/85/100/120/140/144/150
1280*1024	8	2MB	60/70/72/75/85/100/120/140/144/150/170
	16	4MB	60/70/72/75/85/100/120/140/144/150/170
	32	8MB	60/70/72/75/85/100/120/140/144/150
1600*900	8	2MB	60/70/72/75/85/100/120/140/144/150
	16	4MB	60/70/72/75/85/100/120/140/144/150
	32	8MB	60/70/72/75/85/100/120
1600*1200	8	2MB	60/70/72/75/85/100/120
	16	4MB	60/70/72/75/85/100/120
	32	8MB	60/70/72/75/85/100
1920*1080	8	4MB	60/70/72/75/85/100
	16	8MB	60/70/72/75/85/100
	32	16MB	60/70/72/75/85
1920*1200	8	4MB	60/70/72/75/85/100
	16	8MB	60/70/72/75/85/100
	32	16MB	60/70/72/75/85
1920*1440	8	4MB	60/70/72/75/85
	16	8MB	60/70/72/75/85
	32	16MB	60/70/72/75
2048*1536	8	4MB	60/70/72/75
	16	8MB	60/70/72/75
	32	16MB	60

4. Smart Installation

For Windows 95 OSR2.1, Windows 98, WindowsNT4.0 SP3

4.1 Put the DRIVERS CD in your CD-ROM

4.2 Click the **Driver installation**

4.3 If everything fine, screen will show **Confirm Installation** window.
Then Select the **OK**

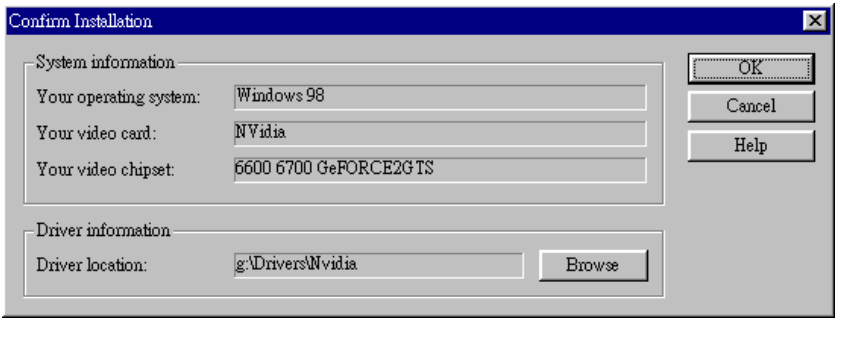

4.4 Now appears the **Driver Confirmation** window
Select the **Install**

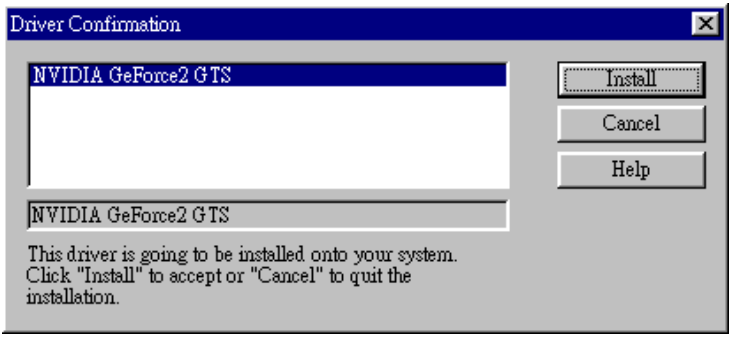

4.5 Then restart your computer.

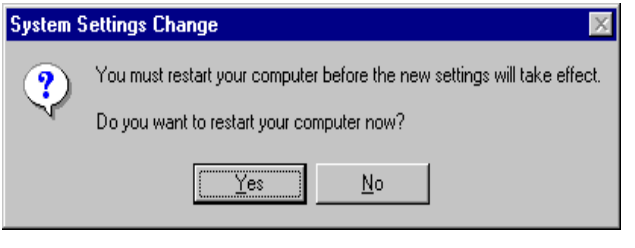

5. Manually install Windows 95 & Windows 98 drivers

5.1 Installation and Setup

5.1.1 Windows95

The Windows setup program installs and modifies all of the necessary files. Follow these steps to install the Windows 95 drivers.

- Insert the DISC (CD Title Driver).
- Select **Control Panel** from **My Computer** group.
- Select the **Display** icon
- Double-click on the **Display** icon in the Setting -> **Control Panel** folder. You can also click the right mouse button anywhere on the desktop and select the Properties option form the pop-out menu.
- Click the **Settings** tab.
- Click the **change** Display Type button.
- Click the **Have Disk** button.
- Change directories and Select **NV4agp.inf**
  Disc (CD Title) is **E:\drivers\Nvidia\6600\WIN95 (GeForce2 GTS DDR SGRAM :6600) & (GeForce2 GTS DDR SDRAM:6700)**

Note: "E:"-> CD Drive **"Nvidia"->** VGA chip brand name **"6600"->** VGA model name

- Select AGP driver form the list and click the **OK** button. If a message stating that one or more driver files is older than the files on the system respond **YES** to overwrite the files.
- Click the Close button and Apply button, and restart your computer.

5.1.2 Windows98

The Windows setup program installs and modifies all of the necessary files. Follow these steps to install the Windows 98 drivers.

- Insert the DISC (CD Title Driver).
- Select **Control Panel** from **My Computer** group.
- Select the **Display** icon
- Double-click on the **Display** icon in the Setting -> **Control Panel** folder. You can also click the right mouse button anywhere on the desktop and select the Properties option form the pop-out menu.
- Click the **Settings** tab.
- Then show **[Unknown Device.] Properties** tab
  Select **Adapter**
- Then show **Standard PCI Graphics…** tab
  Select **Change**
- Then show **Update Device …** tab
  Select **Next**
- Then show **Update Device …** tab
  Select **Search for a better…**
  Then select **Next.**
- Then show **Update Device …** tab
  If the **Specify a location** is wrong
  Please select **Brows**
- Then show **Browse for Folder** tab

Select **E:\drivers\ Nvidia\6600\win98 (GeForce2 GTS DDR SGRAM: 6600) & (GeForce2 GTS DDR SDRAM: 6700)**

Disc (CD Title) is **E:\drivers\ Nvidia\6600\WIN98**

Note: "E:"-> CD Drive **"Nvidia"->** VGA chip brand name **"6600"->** VGA model name

Then select **OK**

- Then show **Update Device Driver Wizard** tab
  Select **CD-ROM driver**
  Click the **Specify a locator,** if right
  Then select **Next**
- Then show **Update Device Driver Wizard** tab
  Select **Next**
- Then show **Update Device Driver Wizard** tab
  Select **Finish**
- Then show **System Settings Change** tab
  Select **OK**

5.2 How to Change Color Depth and Resolution

1. **Make sure that you have installed windows95/98 Driver.**
2. **Click on the** Start **box in the lower left corner and proceed to** Control Panel**.**
3. **Inside the** Control panel **group , click on** Display **icon to open the** Display Properties **folder and select the** Setting table
4. **Click on the pull-down arrow from the** Color **palette area to select color depth or adjust the sliding bar to either** Less **or** More **from the** Desktop area
5. **Select** OK **to restart** WINDOWS95 **and new color depth or the new resolution takes effect.**

5.3 How to Change Refresh Rate

1. Make sure that you have installed windows95/98 Driver. Click on the **Start** box in the lower left corner and proceed to Setting, **Control Panel**
2. Inside the **Control panel** group , click on **Display** icon to open the **Display Properties** folder and choose **Settings** click the **Advance Settings** choose **Adapter**
3. Click on the **Refresh Rate** sub window to change refresh rate
4. Select **OK** and new refresh rate takes effect

Note: If your monitor is not Branded or Plug&Play, you will only see Adapter default and optimal. Please contact your monitor supplier to get right or compatible drivers for your monitor. Otherwise you can not select the refresh rate you wanted.

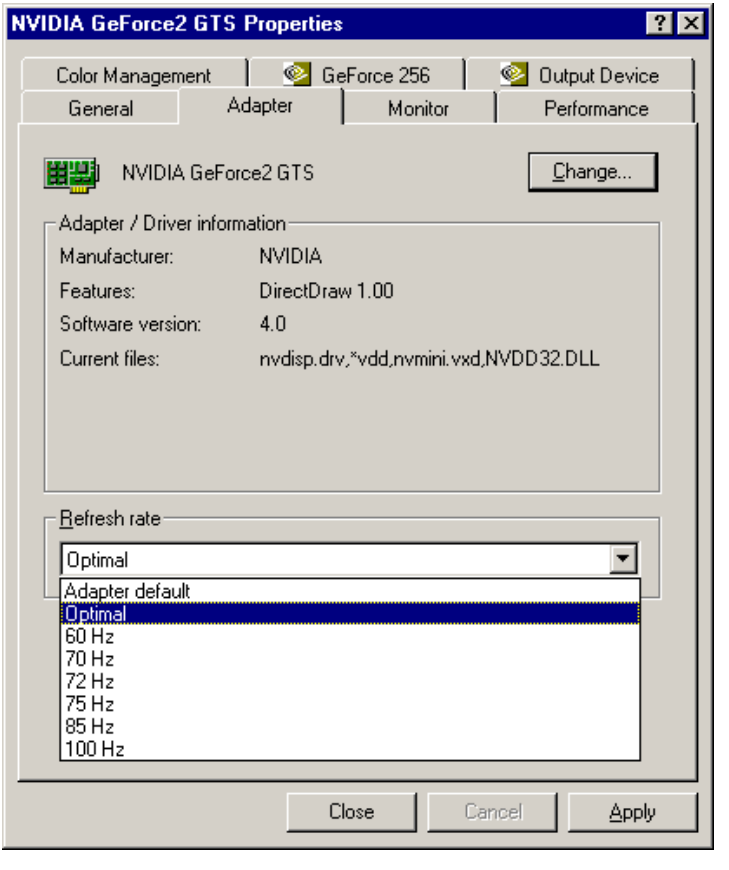

- Refresh Rate default is Optimal.
- If you change Refresh Rate from Optimal to another, you maybe need to restart WINDOWS 95 or 98

6. Windows NT 4.0

The following steps describe how to install Windows NT4.0 display drivers

1. Select **Control Panel** from the **Main** group.
2. Select the **Display** icon.
3. Select **Change Display Type**.
4. Select Change from the **Adapter Type** area.
5. Select **Other**.
6. Place the Disc (CD Title) into CDROM Drive. Click **OK**.
7. Select I**nstall** and click "**YES**" when the Installing Driver dialog box appears.
8. When the Windows NT **Setup** dialog box appears select CDROM, and click "**Continue**".

A message appears stating that drivers were successfully installed. Click **OK**. Another message appears stating that the driver could not be restarted dynamically. Restart **Windows NT** to run the new driver. Click **OK.**

7. Windows 2000

First time install drivers under windows2000

1. When system boot up, system will prompt find new device. Suppose the device is VGA, now system will find the default drivers for you.
2. If you want to install our drivers along with the SP6600/SP6700 pack. Please put the drivers CD in your CDROM drive. If now shows SmartInstall window, please click **EXIT** button to quit.
3. Drivers for windows2000 are located at \2000drv\nvidia\win2000 or \drivers\nvidia\6600\win2000 (For SP6700, please change 6600 to 6700)
4. If the drivers is very new may not certified by Microsoft, if so, system will prompt you the drivers do not have “digital signature”, still you can force to install.
5. Follow on screen instructions will finish the installation.

The following steps describe how to update Windows2000 display drivers

1. Place the Disc (CD Title) into CDROM Drive. If now shows SmartInstall window, please click **EXIT** button to quit
2. Right click mouse button on Desktop Area, now shows a sub menu window. Please select **Properties**.
3. Now come up **Display Properties** window, please select **Settings** on the top.
4. Select **Advanced**
5. Select **Adapter**.
6. Select **Change**
7. Now comes up a update drivers wizard window. Please follow the on screen instruction.
8. Please specify the drivers location at your CDROM letter:\2000drv\nvidia\win2000 or \drivers\nvidia\6600\win2000 (For SP6700, please change 6600 to 6700) or the directory where you put your drivers
9. Select I**nstall** and click “**YES**” when the Installing Driver dialog box appears. If the drivers is very new may not certified by Microsoft, if so, system will prompt you the drivers do not have “digital signature”, still you can force to install.

A message appears stating that drivers were successfully installed. Click **OK**. Another message appears stating that the driver could not be restarted dynamically. Restart Windows2000 to run the new driver. Click **OK.**

FCC Statement

This device complies with part 15 of the FCC Rules. Operation is subject to the following two condition.(1).this device may not cause harmful interference. (2).this device must accept any interference received, including interference that may cause undesired operation

Warning:
Note: This equipment has been tested and found to comply with the limits for a Class B digital device, pursuant to Part 15 of FCC Rules. These limits are designed to provide reasonable protection against harmful interference in a residential installation. This equipment generates, used and can radiate radio frequency energy and, if not installed and used in accordance with the instructions, may cause harmful interference in to radiate communications. However, there is no guarantee that interference will not occur in a particular installation. If this equipment does cause harmful interference to radio or television reception, which can be determined by turning the equipment off and on, the user is encouraged to try to correct the interference by one or more of the following measures:

- Reorient or relocate the receiving antenna
- Increase the separation between the equipment and receiver.
- Connect the equipment into an outlet on a circuit different form that to which the receiver in connected.
- Consult the dealer or an experienced radio/TV technician for help.

Notice:
(1) An Unshielded-type power cord is required in order to meet FCC emission limits and also to prevent interference to the nearby radio and television reception. It is essential that only the supplied power cord by used.
(2) Use only shielded cables to connect I/O devices to this equipment.3
(3) Changes or modifications not expressly approved by the party responsible for compliance could void the use's authority to operate the equipment.

Trademark Acknowledgments

All brand names and trademarks are the property of their owners.