This unit has been engineered and manufactured to ensure your personal safety, however improper use may result in potential e shock or fire hazards. In order to allow the proper operation of all safeguards incorporated in this display, observe the following basic rules for its installation, use, and servicing.

On Safety

Use only the power cord supplied with the unit. In case you use another power cord, make sure that it is certified by the applicable national standards if not being provided by the supplier. If the power cable is faulty in any way, please contact the manufacturer or the nearest authorized repair service provider for a replacement.

The power supply cord is used as the main disconnection device. Ensure that the socket-outlet is easily accessible after installation.

Operate the display only from a power source indicated in the specifications of this manual or listed on the display. If you are not sure what type of power supply you have in your home, consult with your dealer.

Overloaded AC outlets and extension cords are dangerous. So are frayed power cords and broken plugs. They may result in a shock or fire hazard. Call your service technician for replacement.

Do not Open the Display.
- There are no user serviceable components inside.
- There are Dangerous High Voltages inside, even when the power is OFF.
- Contact your dealer if the display is not operating properly.

To Avoid Personal Injury :
- Do not place the display on a sloping shelf unless properly secured.
- Use only a stand recommended by the manufacturer.

To Prevent Fire or Hazards:
- Always turn the display OFF if you leave the room for more than a short period of time. Never leave the display ON when leaving the house.
- Keep children from dropping or pushing objects into the display's cabinet openings. Some internal parts carry hazardous voltages.
- Do not add accessories that have not been designed for this display.
- During a lightning storm or when the display is to be left unattended for an extended period of time, unplug it from the wall outlet.

On Installation

Do not allow anything to rest upon or roll over the power cord, and do not place the display where the power cord is subject to damage.

Do not use this display near water such as near a bathtub, washbowl, kitchen sink, laundry tub, in a wet basement, or near a swimming pool.
Displays are provided with ventilation openings in the cabinet to allow the release of heat generated during operation. If these openings are blocked, built-up heat can cause failures which may result in a fire hazard. Therefore, NEVER:

- Block the bottom ventilation slots by placing the display on a bed, sofa, rug, etc.
- Place the display in a built-in enclosure unless proper ventilation is provided.
- Cover the openings with cloth or other material.
- Place the display near or over a radiator or heat source.

Do not rub or strike the Active Matrix LCD with anything hard as this may scratch, mar, or damage the Active Matrix LCD permanently.

Do not press the LCD screen with your finger for a long time as this may cause some afterimages.

Some dot defects may appear as Red, Green or Blue spots on the screen. However, this will have no impact or effect on the display performance.

If possible, use the recommended resolution to obtain the best image quality for your LCD display. If used under any mode except the recommended resolution, some scaled or processed images may appear on the screen. However, this is characteristic of the fixed-resolution LCD panel.

On Cleaning

- Unplug the display before cleaning the face of the display screen.
- Use a slightly damp (not wet) cloth. Do not use an aerosol directly on the display screen because over-spraying may cause electrical shock.

On Repacking

- Do not throw away the carton and packing materials. They make an ideal container in which to transport the unit. When shipping the unit to another location, repack it in its original material.

Using the Computer

1. Connect the signal cable. When attached, tighten the thumbscrews to secure the connection.
2. Connect the power cord into a proper power outlet that is easily accessible and close to the display.

NOTE

- This is a simplified representation of the rear view.
- This rear view represents a general model; your display may differ from the view as shown.

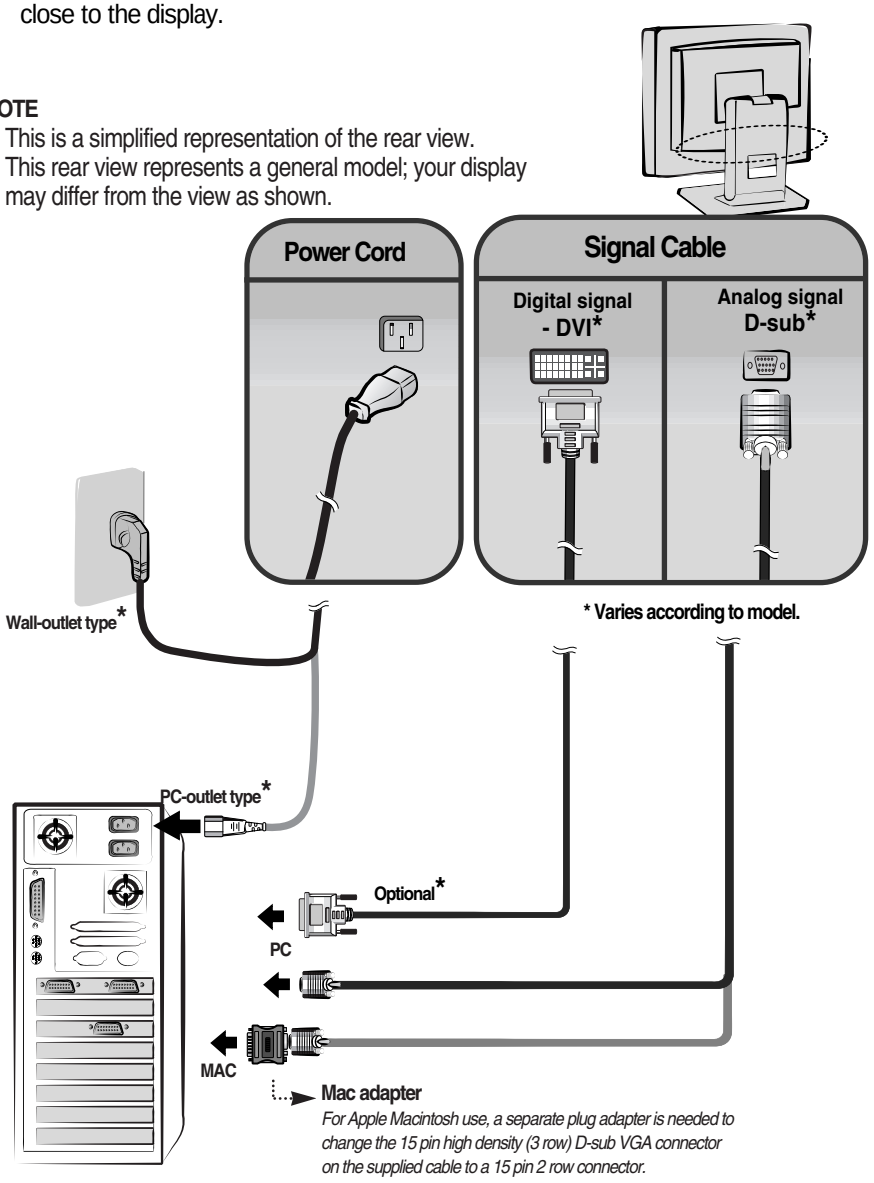

Front Panel Controls

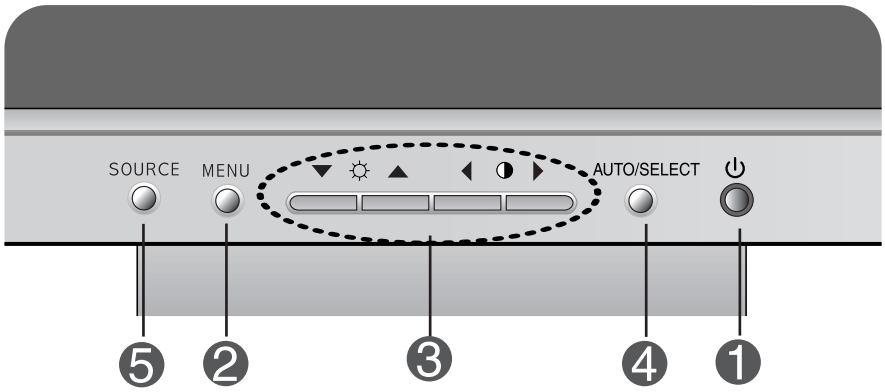

Control		Function
1	**Power Button**	Use this button to turn the display on or off.
	Power (DPMS) Indicator	This Indicator lights up green when the display operates normally. If the display is in DPM (Energy Saving) mode, this indicator color changes to amber.
2	**MENU Button**	Use this button to enter or exit the On Screen Display.
3	**▼▲◀▶ Buttons**	Use these buttons to choose or adjust items in the On Screen Display.
4	**AUTO/SELECT Button**	Use this button to enter a selection in the On Screen Display.

Control	Direct Access Function
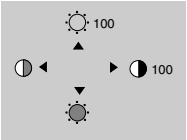	❸ ▼▲◀▶ Bring up Contrast and Brightness adjustment.
PROCESSING AUTO CONFIGURATION	❹ **AUTO adjustment function** When adjusting your display settings, always press the **AUTO/SELECT** button before entering the On Screen Display(OSD). This will automatically adjust your display image to the ideal settings for the current screen resolution size (display mode). The best display mode is **1280x1024**.
	❺ **SOURCE** Use this button to make Dsub or DVI connector active. This feature is used when two computers are connected to the display. The default setting is Dsub.
CONTROLS LOCKED CONTROLS UNLOCKED	**CONTROLS LOCKED/UNLOCKED** **: MENU and ▶** This function allows you to secure the current control settings, so that they cannot be inadvertently changed. Press and hold the MENU button and ▶ button for 3 seconds: the message **"CONTROLS LOCKED"** appears. You can unlock the OSD controls at any time by pushing the MENU button and ▶ button for 3 seconds: the message **"CONTROLS UNLOCKED"** will appear.

Screen Adjustment

Making adjustments to the image size, position and operating parameters of the display is quick and easy with the On Screen Display Control system. A short example is given below to familiarize you with the use of the controls. The following section is an outline of the available adjustments and selections you can make using the OSD.

NOTE

- Allow the display to stabilize for at least 30 minutes before making image adjustments.

To make adjustments in the On Screen Display, follow these steps:

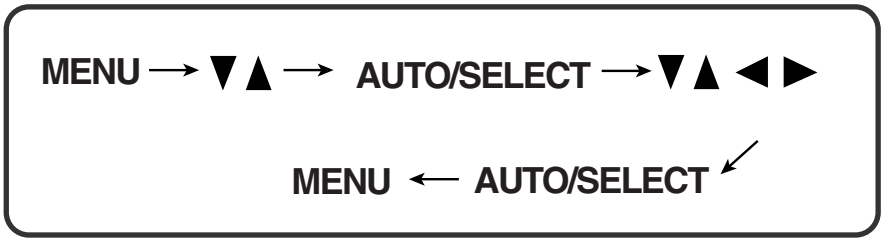

1. Press the MENU Button, then the main menu of the OSD appears.
2. To access a control, use the ▼ or ▲ Buttons. When the icon you want becomes highlighted, press the AUTO/ SELECT Button.
3. Use the ▼▲ ◄ ► Buttons to adjust the item to the desired level.
4. Accept the changes by pressing the AUTO/SELECT Button.
5. Exit the OSD by Pressing the MENU Button.

On Screen Display(OSD) Selection and Adjustment

The following table indicates all the On Screen Display control, adjustment, and setting menus.

Main menu	Sub menu		A	D	Reference
BRIGHTNESS CONTRAST	BRIGHTNESS		●	●	To adjust the brightness and contrast of the screen
	CONTRAST		●	●	
COLOR	PRESET	9300K	●	●	To customize the color of the screen
		6500K	●	●	
	R/G/B(User Color)		●	●	
	GAMMA		●	●	
POSITION	V POSITION		●		To adjust the position of the screen
	H POSITION		●		
TRACKING	CLOCK		●		To improve the clarity and stability of the screen
	PHASE		●		
SETUP	LANGUAGE*		●	●	To customize the screen status for a user's operating environment
	IMAGE SIZE*				
	OSD POSITION*		●	●	
	SIGNAL*		●	●	
	FACTORY RESET*		●	●	

● : Adjustable
A : Analog Input
D : Digital Input

NOTE

- The order of icons may differ depending on the model (A7~A9).
- * This function is available for designated models only.

You were introduced to the procedure of selecting and adjusting an item using the OSD system. Listed below are the icons, icon names, and icon descriptions of the all items shown on the Menu.

To adjust the brightness and contrast of the screen

OSD Adjust	Description
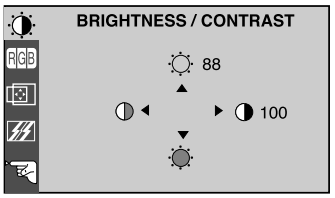	**BRIGHTNESS** To adjust the brightness of the screen. **CONTRAST** To adjust the contrast of the screen.

To customize the color of the screen

OSD Adjust	Description
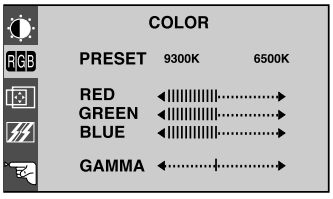	**PRESET** **9300K/6500K** Select the screen color. • 9300K: Slightly bluish white. • 6500K: Slightly reddish white. **RED** **GREEN** **BLUE** Set your own color levels. **GAMMA** Set your own gamma value. (-50~50) On the monitor, high gamma values display whitish images and low gamma values display high contrast images.

To adjust the position of the screen

OSD Adjust	Description
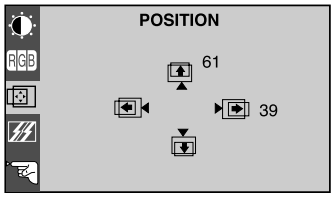	**Vertical Position** To move image up and down. **Horizontal Position** To move image left and right.

To improve the clarity and stability of the screen

OSD Adjust	Description
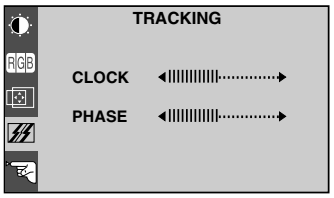	**CLOCK** To minimize any vertical bars or stripes visible on the screen background.The horizontal screen size will also change. **PHASE** To adjust the focus of the display. This item allows you to remove any horizontal noise and clear or sharpen the image of characters.

To customize the screen status for a user's operating environment

OSD Adjust	Description
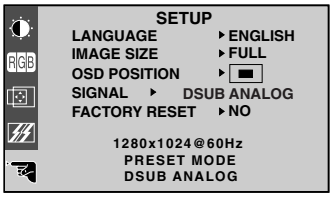	**LANGUAGE*** To choose the language in which the control names are displayed. **IMAGE SIZE*** This function displays the image in its original size or enlarged size so as to fit in the full screen of the LCD panel. **OSD POSITION*** To adjust position of the OSD window on the screen. **SIGNAL*** To select DSUB ANALOG, DVI DIGITAL or DVI ANALOG / as the active input. This feature is used when two computers are connected to the display. The display automatically detects the proper input when only one video source is connected. **FACTORY RESET*** Return to all factory default settings except "LANGUAGE". If you don't want to reset the monitor, use the ◀ ▶ button to select **NO** and then press the **SELECT** button.

NOTE

- * This function is available for designated models only. PAGE A7

Check the following before calling for service.

No image appears	
◉ **Is the power cord of the display connected?**	• Check and see if the power cord is connected properly to the power outlet.
◉ **Is the power indicator light on?**	• Press the Power button.
◉ **Is the power on and the power indicator green?**	• Adjust the brightness and the contrast.
◉ **Is the power indicator amber?**	• If the display is in power saving mode, try moving the mouse or pressing any key on the keyboard to bring up the screen. • Make sure if the power is on. • Try to turn on the PC.
◉ **Do you see an "INPUT SIGNAL OUT OF RANGE" message on the screen?**	• This message appears when the signal from the PC (video card) is out of horizontal or vertical frequency range of the display. See the 'Specifications' section of this manual and configure your display again.
◉ **Do you see a "NO SIGNAL "message on the screen?**	• This message appears when the signal cable between your PC and your display is not connected. Check the signal cable and try again.

Do you see a "CONTROLS LOCKED" message on the screen?	
◉ **Do you see "CONTROLS LOCKED" when you push MENU button?**	• You can secure the current control settings, so that they cannot be inadvertently changed. You can unlock the OSD controls at any time by pushing the **MENU** button and ► button for 3 seconds: the message **"CONTROLS UNLOCKED"** will appear.

Display image is incorrect

◉ **Display Position is incorrect.**	• Press the **AUTO/SELECT** button to automatically adjust your display image to the ideal setting. If the results are unsatisfactory, adjust the image position using the **H position and V position** icon in the on screen display. • Check **Control Panel --> Display --> Settings** and see if the frequency or the resolution were changed. If yes, readjust the video card to the recommend resolution**.**
◉ **On the screen background, vertical bars or stripes are visible.**	• Press the **AUTO/SELECT** button to automatically adjust your display image to the ideal setting. If the results are unsatisfactory, decrease the vertical bars or stripes using the **CLOCK** icon in the on screen display.
◉ **Any horizontal noise appearing in any image or characters are not clearly portrayed.**	• Press the **AUTO/SELECT** button to automatically adjust your display image to the ideal setting. If the results are unsatisfactory, decrease the horizontal bars using the **PHASE** icon in the on screen display. • Check **Control Panel --> Display --> Settings** and adjust the display to the recommended resolution or adjust the display image to the ideal setting. Set the color setting higher than 24 bits (true color).
◉ **The screen color is mono or abnormal.**	• Check if the signal cable is properly connected and use a screwdriver to fasten if necessary. • Make sure the video card is properly inserted in the slot. • Set the color setting higher than 24 bits (true color) at **Control Panel - Settings**.
◉ **The screen blinks.**	• Check if the screen is set to interlace mode and if yes, change it to the recommend resolution. • Make sure the power voltage is high enough, It has to be higher than **AC100-240V 50/60Hz.**

Have you installed the display driver?

◉ **Have you installed the display driver?**	• Be sure to install the display driver from the display driver CD (or diskette) that comes with your display. Or, you can also download the driver from our web site: http://www.lge.com.
◉ **Do you see an "Unrecognized monitor, Plug&Play (VESA DDC) monitor found" message?**	• Make sure to check if the video card supports Plug&Play function.

USB function

◉ **USB function cannot be setup.**	• Check if the USB cable is correctly connected. • Check if the PC and OS are USB compliant. For verification of USB support, consult the manufacturer of each system.

Specifications

Display	18.1 inches (45.97cm) Flat Panel Active matrix-TFT LCD Anti-Glare coating 18.1 inches viewable 0.28mm pixel pitch	
Sync Input	Horizontal Freq.	Analog:30 - 83kHz (Automatic) Digital:30 - 71kHz (Automatic)
	Vertical Freq.	56 - 75Hz (Automatic)
	Input Form	Separate TTL, Positive/Negative Composite TTL Positive/Negative SOG (Sync On Green) Digital
Video Input	Signal Input	15 pin D-Sub Connector DVI - I connector (Digital/Analog)
	Input Form	RGB Analog (0.7Vp-p/75ohm), Digital
Resolution	Max	Digital:VESA 1280 x 1024@60Hz Analog:VESA 1280 x 1024@75Hz
	Recommend	VESA 1280 x 1024@60Hz
Plug&Play	DDC 2B	
Power Consumption	Normal	: 53W
	Stand-by/Suspend	≤ 3W
	DPMS Off	≤ 3W
Dimensions &Weight (with tilt/ swivel stand)	Width	40.6 cm / 15.98 inches
	Height	43.1 cm / 16.97 inches
	Depth	22.3 cm / 8.78 inches
	Net	7.8 kg (17.19 lbs)
Tilt/Swivel Range	Tilt	-5˚~30˚
	Swivel	360˚
Power Input	AC 100-240V 50/60Hz 1.0A	
Environmental Conditions	Operating Conditions	
	Temperature	10˚C to 35 ˚C
	Humidity	10 % to 80 % non-Condensing
	Storage Conditions	
	Temperature	-20˚C to 60 ˚C
	Humidity	5 % to 95 % non-Condensing
Tilt/Swivel Stand	Attached(O), Detached ( )	
Signal cable	Attached( ), Detached (O)	
Power cord	Wall-outlet type or PC-outlet type	
Regulations	TCO99	

NOTE

- Information in this document is subject to change without notice.

Preset Modes (Resolution)

Display Modes (Resolution)			Horizontal Freq. (kHz)	Vertical Freq. (Hz)
1	VGA	640 x 350	31.469	70
2	VGA	720 x 400	31.468	70
3	VGA	640 x 480	31.469	60
4	VESA	640 x 480	37.500	75
5	VESA	800 x 600	37.879	60
6	VESA	800 x 600	46.875	75
7	MAC	832 x 624	49.725	75
8	VESA	1024 x 768	48.363	60
9	VESA	1024 x 768	60.123	75
10	MAC	1152 x 870	68.681	75
11	VESA	1152 x 900	61.805	65
12	VESA	1280 x 1024	63.981	60
13	VESA	1280 x 1024	79.976	75

VESA wall mounting
Connected to another object (stand type and wall-mounted type. This monitor accepts a VESA-compliant mounting interface pad.)

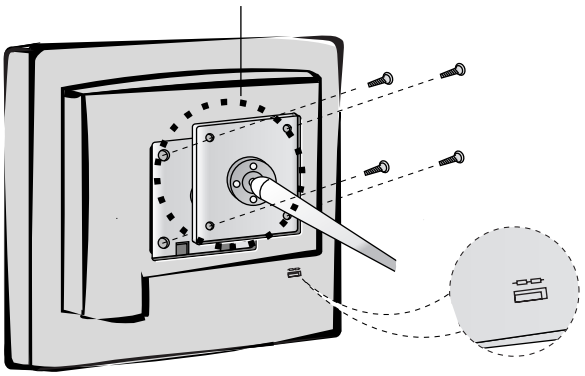

Kensington Security Slot- optional
Connected to a locking cable that can be purchased separately at most computer stores

Signal Connector Pin Assignment

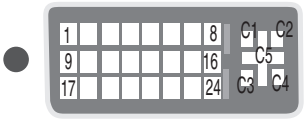

■ DVI-I Connector

Pin	Signal(DVI-I)	Pin	Signal(DVI-I)
1	T. M. D. S. Data2-	16	Hot Plug Detect
2	T. M. D. S. Data2+	17	T. M. D. S. Data0-
3	T. M. D. S. Data2/4 Shield	18	T. M. D. S. Data0+
4	T. M. D. S. Data4-	19	T. M. D. S. Data0/5 Shield
5	T. M. D. S. Data4+	20	T. M. D. S. Data5-
6	DDC Clock	21	T. M. D. S. Data5+
7	DDC Data	22	T. M. D. S. Clock Shield
8	Analog Vertical Sync.	23	T. M. D. S. Clock+
9	T. M. D. S. Data1-	24	T. M. D. S. Clock-
10	T. M. D. S. Data1+	C1	Analog Red
11	T. M. D. S. Data1/3 Shield	C2	Analog Green
12	T. M. D. S. Data3-	C3	Analog Blue
13	T. M. D. S. Data3+	C4	Analog H. Sync.
14	+5V Power	C5	Analog Ground
15	Ground (return for +5V, H. Sync. and V. Sync.)		

T. M. D. S. (Transition Minimized Differential Signaling)